Gas spring (Spring plunger), with hexagon socket, VDI 3004

VDI

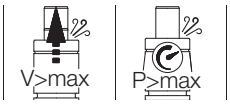

2479.042.

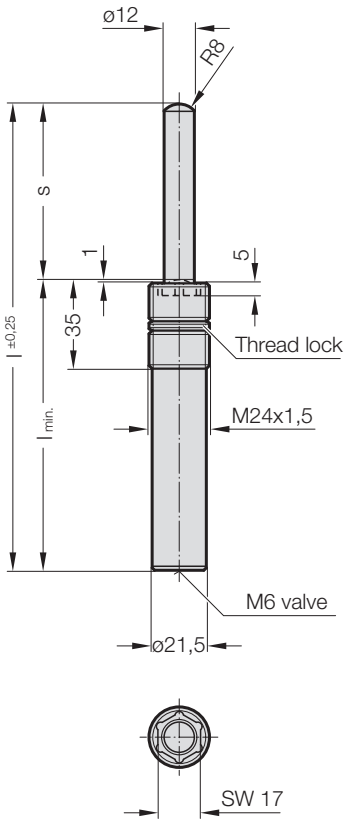

Description:
Spring plungers are used as ejectors, damper pins, fixing and retaining pins in many sectors of the tool-, jig- and fixture-making industries. Assembly requires the use of special FIBRO insertion tool (2470.12.010.017).

Note:
Worn gas springs cannot be repaired, they have to be replaced completely.

Pressure medium: Nitrogen - N_2
Max. filling pressure: 150 bar
Min. filling pressure: 10 bar
Working temperature: 0°C to +80°C
Temperature related force increase: ± 0.3%/°C
Max. recommended extensions per minute: approx. 50 - 100 (at 20°C)
Max. piston rod speed: 1.8 m/s

Upon customers request, also available unfilled, Order No 2479.042.00000...., Colour: black

[2] Hexagon nut order supplementary: 2479.004.024.15 (M24 x 1,5)

2479.042. Gas spring (Spring plunger), with hexagon socket, VDI 3004

Spring type:				.00020.		.00040.		.00080.		.00170.		
Order No*	s (Stroke max.)	l	$l_{min.}$	$F_{initial}$ [daN]	F_{final} [daN]	$F_{initial}$ [daN]	F_{final} [daN]	$F_{initial}$ [daN]	F_{final} [daN]	$F_{initial}$ [daN]	F_{final} [daN]	Weight [kg]
2479.042.□□□□□.010	10	65	55	23	42.8	45	83.7	85	158.1	170	316.2	0.16
2479.042.□□□□□.020	20	85	65	23	42.8	45	83.7	85	158.1	170	316.2	0.18
2479.042.□□□□□.030	30	105	75	23	42.8	45	83.7	85	158.1	170	316.2	0.2
2479.042.□□□□□.040	40	125	85	23	42.8	45	83.7	85	158.1	170	316.2	0.23
2479.042.□□□□□.050	50	145	95	23	42.8	45	83.7	85	158.1	170	316.2	0.25
2479.042.□□□□□.060	60	165	105	23	42.8	45	83.7	85	158.1	170	316.2	0.27
2479.042.□□□□□.070	70	185	115	23	42.8	45	83.7	85	158.1	170	316.2	0.29
2479.042.□□□□□.080	80	205	125	23	42.8	45	83.7	85	158.1	170	316.2	0.3
2479.042.□□□□□.100	100	245	145	23	42.8	45	83.7	85	158.1	170	316.2	0.33
2479.042.□□□□□.125	125	295	170	23	42.8	45	83.7	85	158.1	170	316.2	0.35
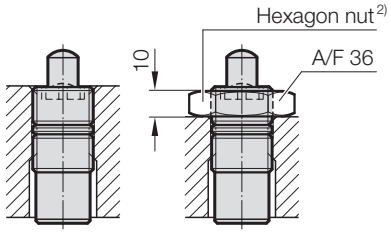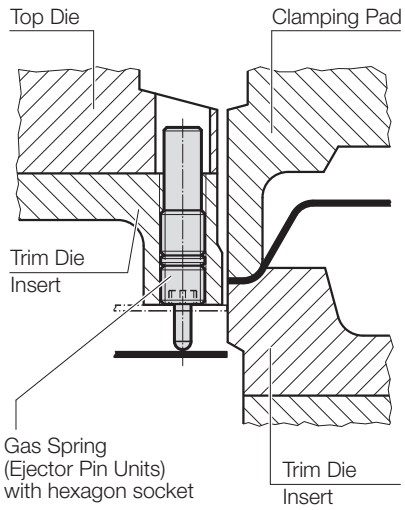
*complete with spring type
Spring force marking:
Spring type - Pressure [bar] - Colour:
.00020. - 20 - green
.00040. - 40 - blue
.00080. - 75 - red
.00170. - 150 - yellow