GAS SPRING, STANDARD MOUNTING VARIATIONS

2480.007.05000

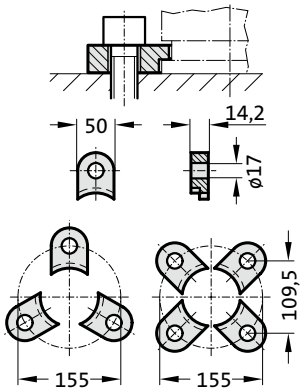

2480.008.05000 [3]

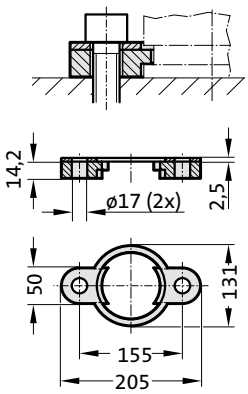

2480.010.05000.160 [3]

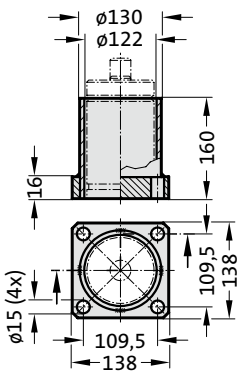

2480.011.05000

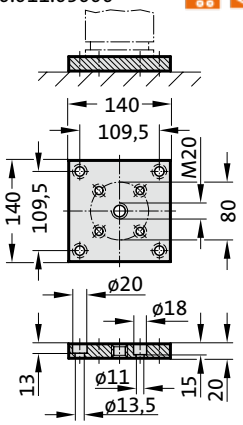

2480.011.05000.2

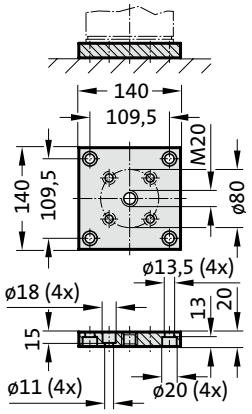

2480.022.05000

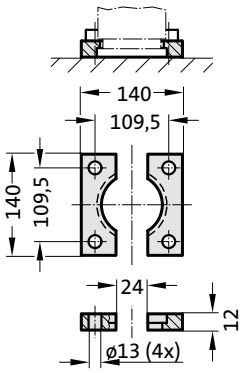

2480.044.05000 [2]

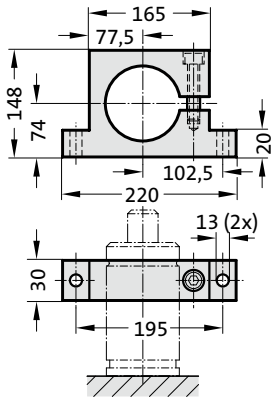

2480.044.03.05000 [2]

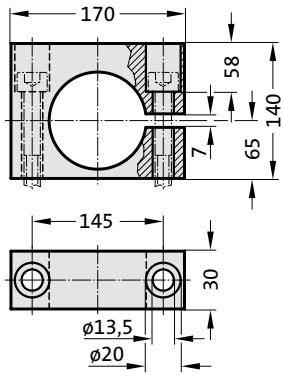

2480.045.05000 [2]

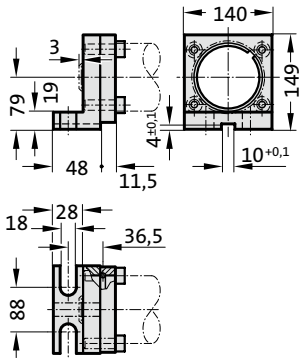

2480.047.05000 [2]

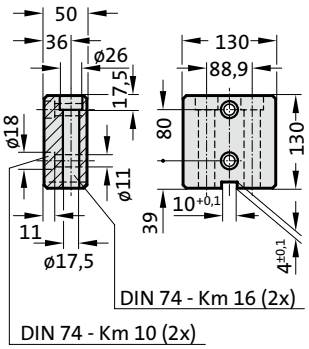

2480.055.05000

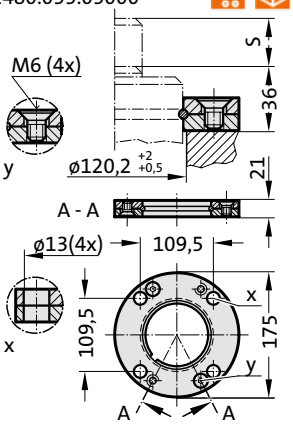

2480.057.05000

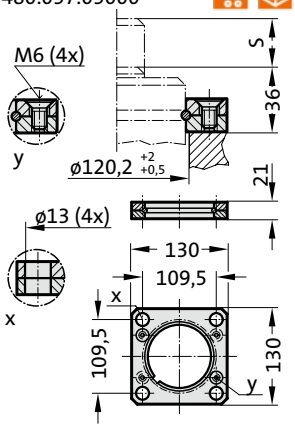

2480.064.05000 [4]

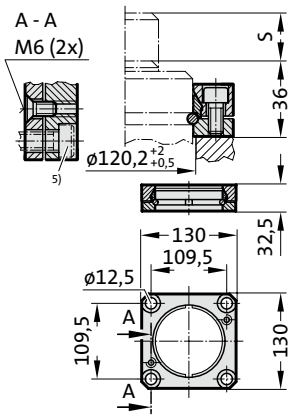

Note:

[2] Attention:
The spring force must be absorbed by the stop Surface!

[3] Not for use with composite connection.

[4] Square collar flange, non-rotating, fixing for composite connection.

[5] Machine screws with hexagonal socket (compact head recommended)