Gas spring, Standard
Mounting variations

2480.007.03000

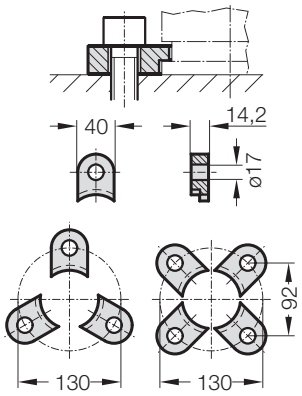

2480.008.03000 [3]

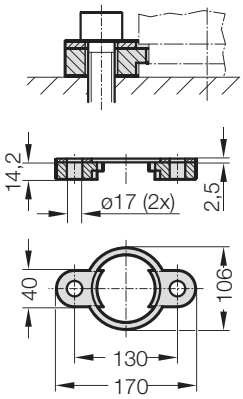

2480.010.03000.140 [3]
2480.010.03000.215* [3]

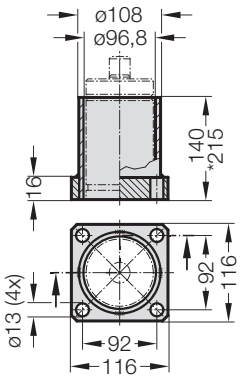

2480.011.03000

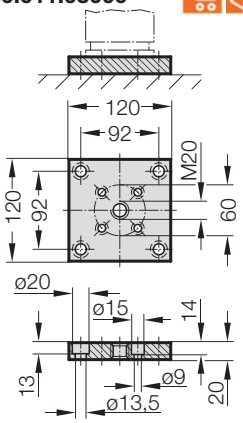

2480.011.03000.2

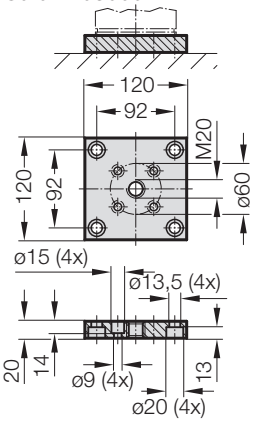

2480.022.03000

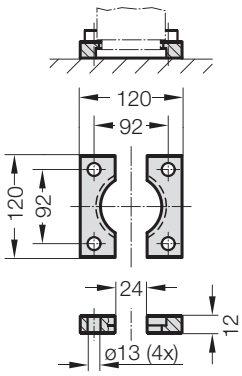

2480.044.03000 [2]

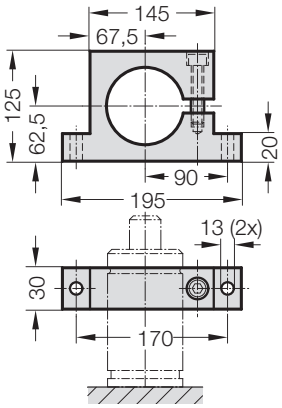

2480.044.03.03000 [2]

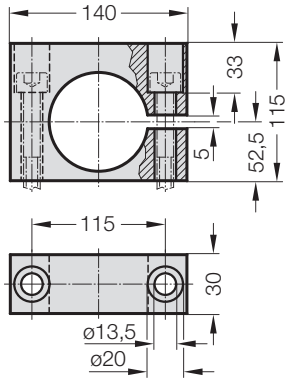

2480.045.03000 [2]

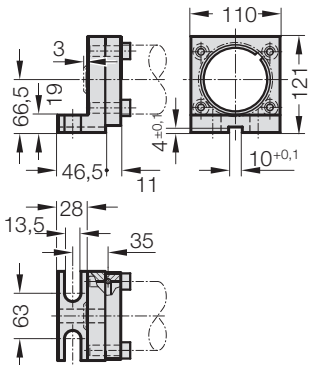

2480.047.03000 [2]

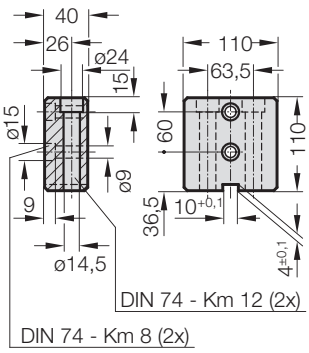

2480.055.03000

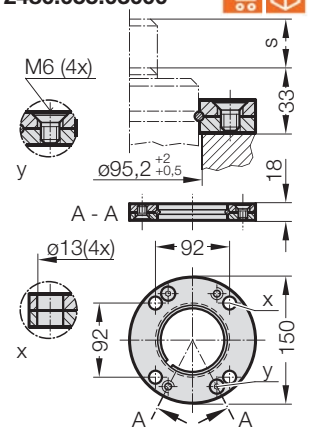

2480.057.03000

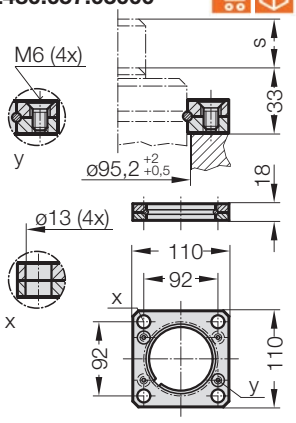

2480.064.03000 [4]

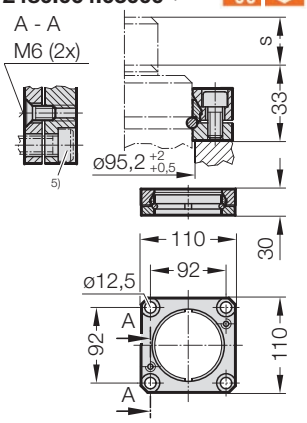

Note:

[2] Attention:
The spring force must be absorbed by the stop Surface!
[3] Not for use with composite connection.
[4] Square collar flange, non-rotating, fixing for composite connection.
[5] Machine screws with hexagonal socket (compact head recommended)