GAS SPRING POWERLINE

Note:
Initial spring force at 150 bar = 2400 daN

Order No for spare parts kit: 2487.12.02400

Gas spring without valve
Order No (example): 2487.12.02400. .P

Pressure medium: Nitrogen N_2
Max. filling pressure: 150 bar
Min. filling pressure: 25 bar
Working temperature: 0°C to +80°C
Temperature related force increase: ± 0.3%/°C
Max. recommended extensions per minute:
approx. 20 to 100 (at 20°C)
Max. piston speed: 1.6 m/s

2487.12.02400.

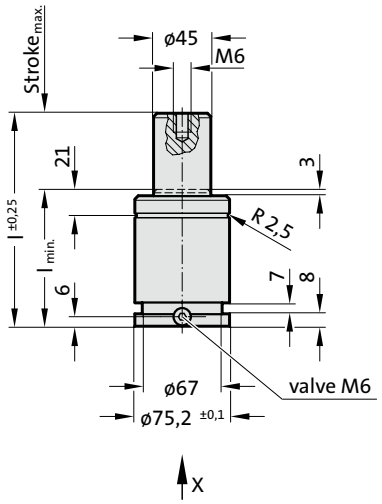

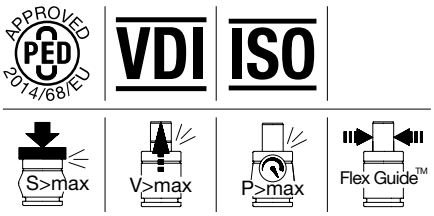

View X

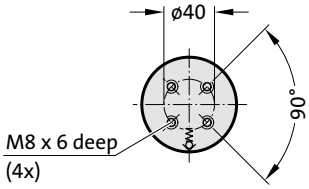

2487.12.02400.

Gas spring POWERLINE

Order No	$Stroke_{max.}$ (s)	$l_{min.}$	l
2487.12.02400.016	16	61	77
2487.12.02400.019	19	64	83
2487.12.02400.025	25	70	95
2487.12.02400.032	32	77	109
2487.12.02400.038	38	83	121
2487.12.02400.050	50	95	145
2487.12.02400.063	63	108	171
2487.12.02400.075	75	120	195
2487.12.02400.080	80	125	205
2487.12.02400.100	100	145	245
2487.12.02400.125	125	170	295

Initial spring force
versus charge pressure

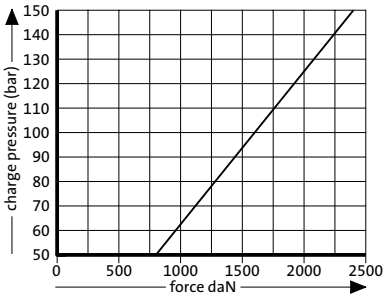

Spring force Diagram displacement versus stroke rise

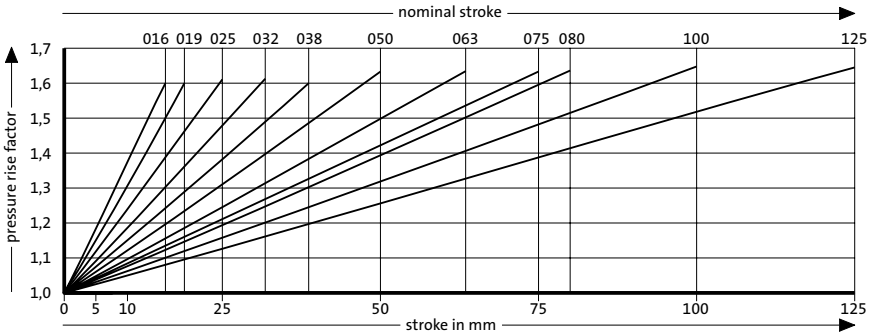

Pressure rise factor accounts for displacement but not external influences!