Gas spring POWERLINE with reinforced spring base
Mounting variations

2480.007.01500

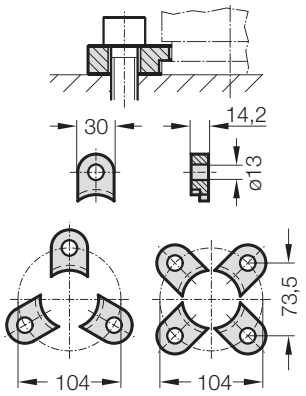

2480.008.01500 [3]

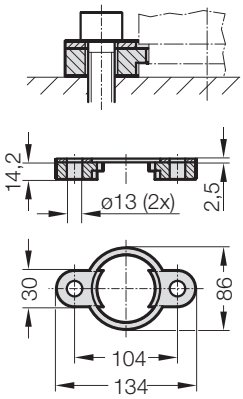

2480.010.01500.130 [3]
2480.010.01500.205* [3]

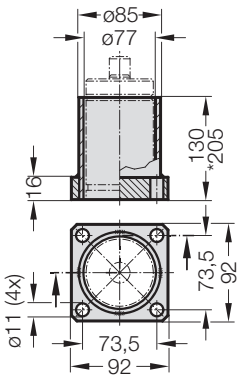

2480.011.01500

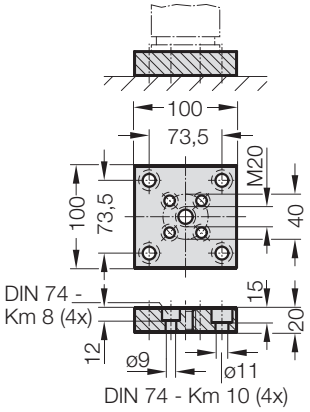

2480.011.01500.2

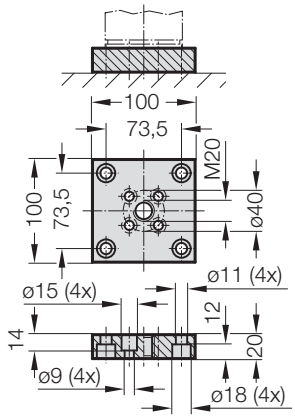

2480.022.01500

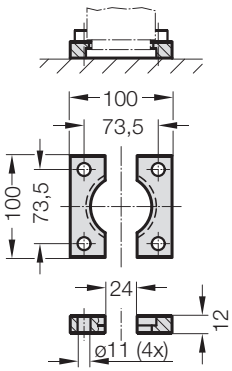

2480.044.01500 [2]

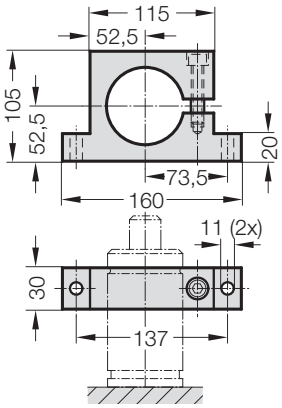

2480.044.03.01500 [2]

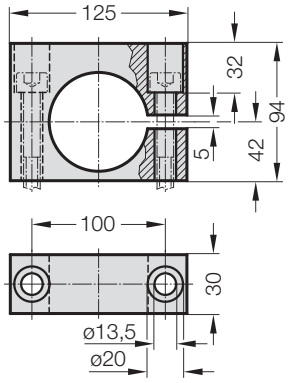

2480.045.01500 [2]

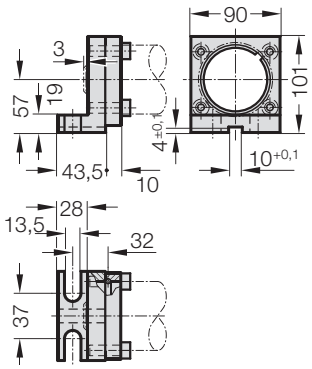

2480.047.01500 [2]

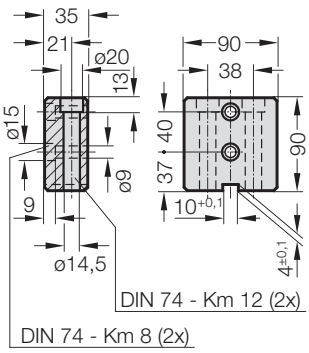

2480.055.01500

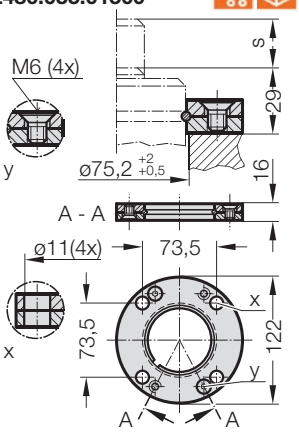

2480.057.01500

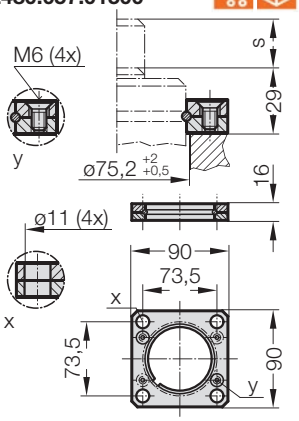

2480.064.01500 [4]

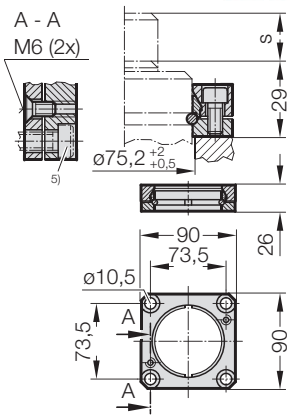

Note:

[2] Attention:
The spring force must be absorbed by the stop Surface!
[3] Not for use with composite connection.
[4] Square collar flange, non-rotating, fixing for composite connection.
[5] Machine screws with hexagonal socket (compact head recommended)