GAS SPRING MOULD LINE
MOUNTING VARIATIONS

2480.044.00250 [2)]

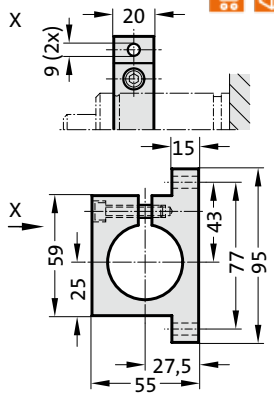

2480.044.03.00250 [2)]

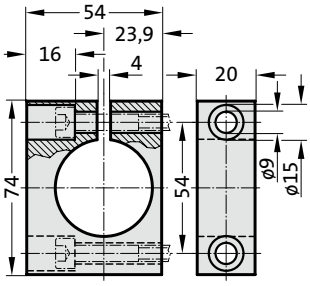

2480.055.00250

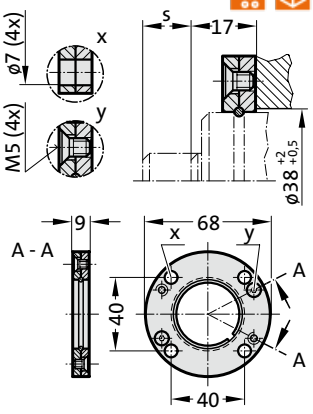

2480.057.00250

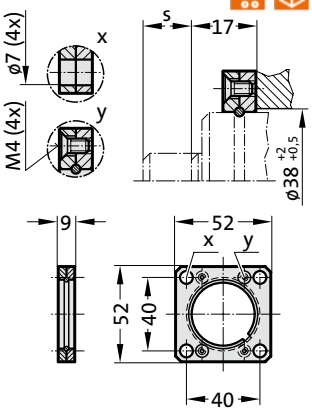

Note:

[2)] Attention:
The spring force must be absorbed by the stop Surface!