GAS SPRING MOULD LINE
MOUNTING VARIATIONS

2480.044.00500 [2)]

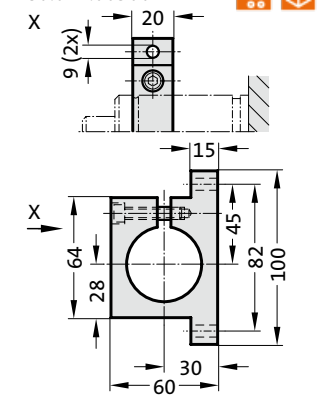

2480.044.03.00500 [2)]

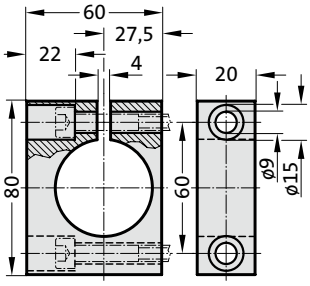

2480.055.00500

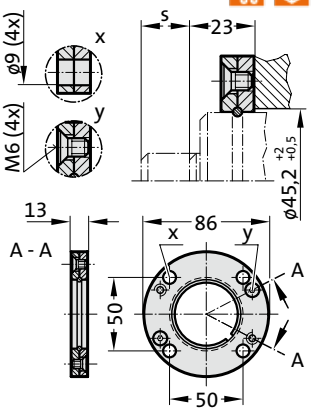

2480.057.00500

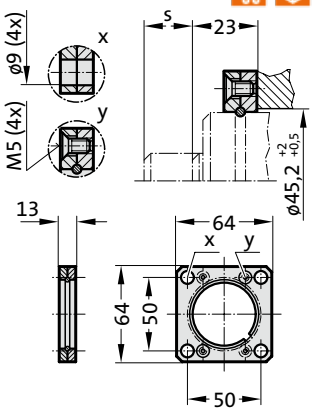

2480.064.00500 [4)]

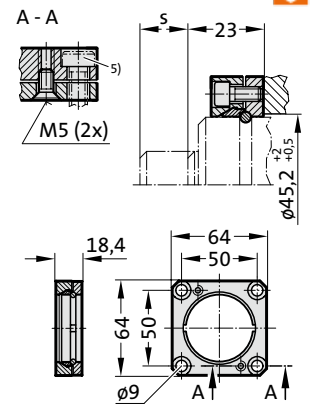

Note:

[2)] Attention:
The spring force must be absorbed by the stop Surface!

[4)] Square collar flange, non-rotating, fixing for composite connection.

[5)] Machine screws with hexagonal socket (compact head recommended)